Reflective Object Sensor

OPB703 through OPB705, OPB703WZ through OPB705WZ, OPB70AWZ through OPB70HWZ

WZ Version

Features:

- Phototransistor output
- High sensitivity
- Low-cost plastic housing
- Available with lenses for dust protection and ambient light filtration
- Focused for maximum sensitivity

Description:

The **OPB703**, **OPB704** and **OPB705** consist of an Infrared (890nm) Light Emitting Diode (LED) and a NPN silicon Phototransistor, mounted side-by-side on converging optical axes in a black plastic housing and are designed for PCBoard mounting. The **OPB703WZ**, **OPB704WZ, OPB705WZ** and **OPB70BWZ** are designed for remote mounting utilizing interconnect wires of UL approved 26 AWG, 24" (61.0cm) minimum length, stripped and tinned.

The **OPB70AWZ** consists of an Infrared (890nm) Light Emitting Diode (LED) and a NPN silicon Photodarlington, mounted side-by-side on converging optical axes in a black plastic housing and is designed for remote mounting utilizing interconnect wires of UL approved 26 AWG, 24" (61.0cm) minimum length, stripped and tinned.

The **OPB70CWZ through OPB70FWZ** consist of a Visible (Red 640nm) Light Emitting Diode (LED) and a NPN silicon Phototransistor or Rbe Phototransistor, mounted side-by-side on converging optical axes in a black plastic housing and are designed for remote mounting utilizing interconnect wires of UL approved 26 AWG, 24" (61.0cm) minimum length, stripped and tinned.

Various lens options are available: No lens for the **(OPB703, OPB703WZ)**, blue window for dust protection for the **(OPB704, OPB704WZ, OPB70BWZ, OPB70HWZ)** and aperture lens for improved resolution for the **(OPB705, OPB705WZ, OPB70AWZ, OPB70CWZ, OPB70DWZ)**. The **OPB704G** and **OPB704GWZ** offers excellent protection for dirty environments.

The phototransistor responds to illumination from the emitter when a reflective object passes within the field of view centered typically at 0.15" (3.8 mm).

Custom electrical, wire, cabling and connectors are available. Contact your local representative or OPTEK for more information.

Applications:

- Non-contact reflective object sensor
- Assembly line automation
- Machine automation
- Machine safety
- End of travel sensor
- Door sensor
- Mark Detection
- Office Equipment

Ordering Information

Part	LED Peak	Detector	Optical Cover	Lead or Wire
OPB703	890 nm	Transistor	None	0.160" Leads
OPB703WZ				24" / 26 AWG Wire
OPB704			Blue Window	0.160" Leads
OPB704WZ				24" / 26 AWG Wire
OPB70HWZ				24" / 26 AWG Wire
OPB704G				0.160" Leads
OPB704GWZ				24" / 26 AWG Wire
OPB705			Aperture	0.160" Leads
OPB705WZ				24" / 26 AWG Wire
OPB70AWZ		Darlington		
OPB70BWZ		Rbe Transistor	Blue Window	
OPB70CWZ	640 nm	Rbe Transistor	Aperture	
OPB70DWZ		Transistor		
OPB70EWZ		Rbe Transistor	Clear Window	
OPB70FWZ		Transistor		

RoHS

General Note
TT Electronics reserves the right to make changes in product specification without notice or liability. All information is subject to TT Electronics' own data and is considered accurate at time of going to print.

OPTEK Technology, Inc.
1645 Wallace Drive, Carrollton, TX 75006|Ph: +1 972 323 2200
www.optekinc.com | www.ttelectronics.com

© TT electronics plc

Reflective Object Sensor

OPB703 through OPB705, OPB703WZ through OPB705WZ, OPB70AWZ through OPB70HWZ

OPB703, OPB704, OPB705

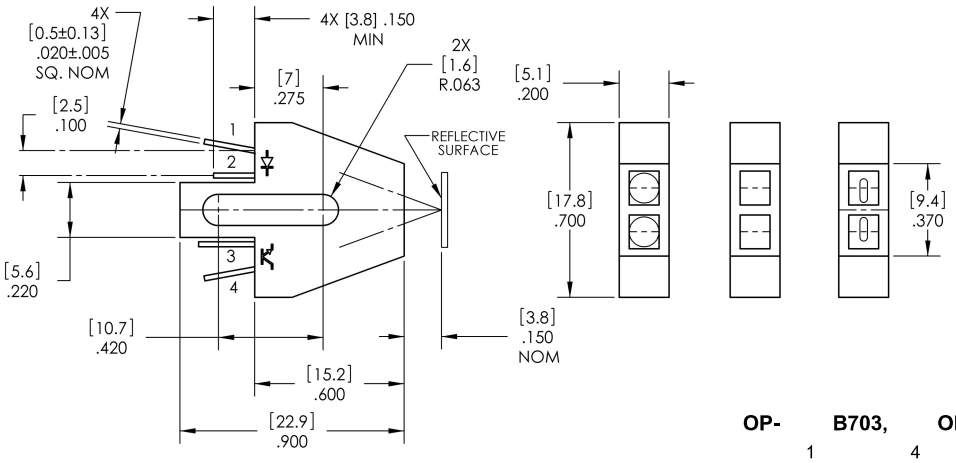

PIN NO.	FUNCTION
1	ANODE
2	CATHODE
3	EMITTER
4	COLLECTOR

DIMENSIONS ARE IN INCHES [MM]
TOLERANCES ARE ± .010 UNLESS OTHERWISE SPECIFIED.

OP- B703, OP-

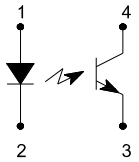

OPB703WZ, OPB704WZ, OPB705WZ, OPB70AWZ, OPB70BWZ, OPB70CWZ, OPB70DWZ

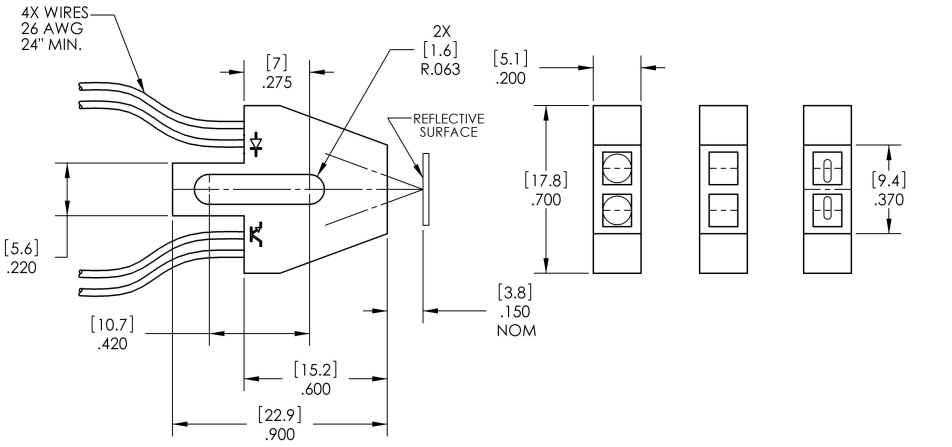

WIRE COLOR	FUNCTION
ORANGE	ANODE
GREEN	CATHODE
BLUE	EMITTER
WHITE	COLLECTOR

DIMENSIONS ARE IN INCHES [MM]
TOLERANCES ARE ± .010 UNLESS OTHERWISE SPECIFIED.

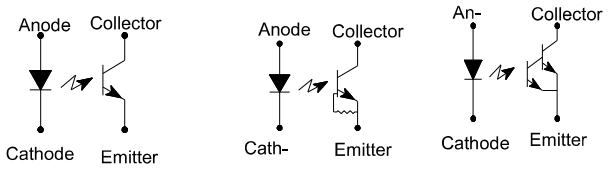

General Note
TT Electronics reserves the right to make changes in product specification without notice or liability. All information is subject to TT Electronics' own data and is considered accurate at time of going to print.

OPTEK Technology, Inc.
1645 Wallace Drive, Carrollton, TX 75006|Ph: +1 972 323 2200
www.optekinc.com | www.ttelectronics.com

© TT electronics plc

Reflective Object Sensor

OPB703 through OPB705, OPB703WZ through OPB705WZ, OPB70AWZ through OPB70HWZ

OPB704G

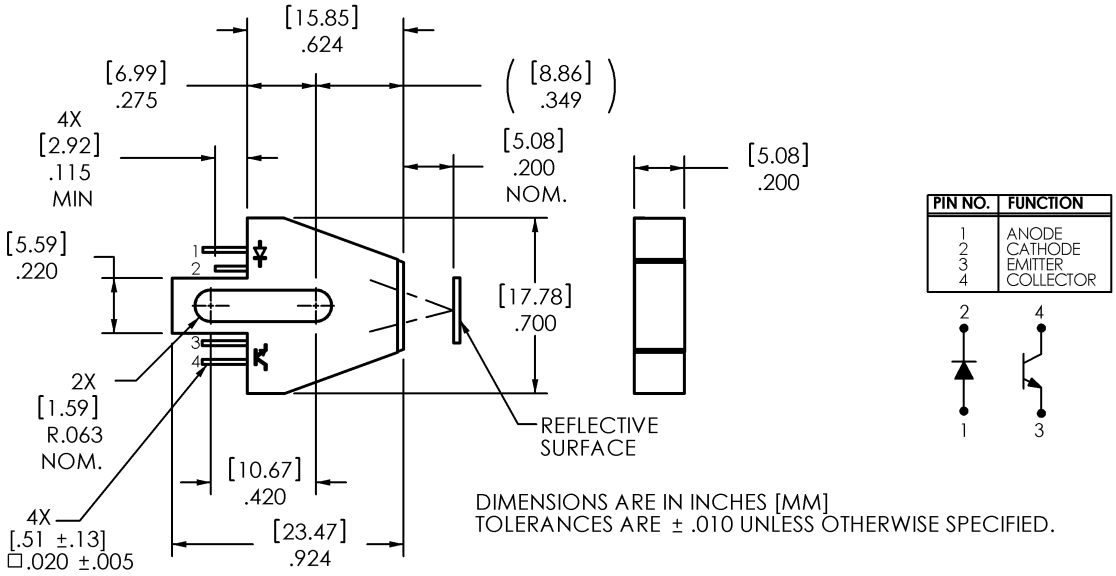

OPB704GWZ

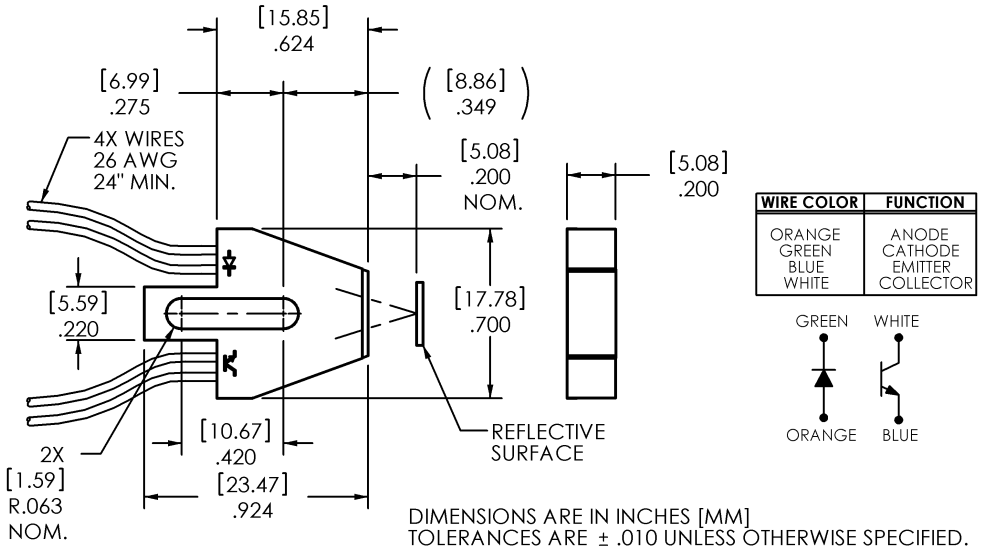

General Note
TT Electronics reserves the right to make changes in product specification without notice or liability. All information is subject to TT Electronics' own data and is considered accurate at time of going to print.

OPTEK Technology, Inc.
1645 Wallace Drive, Carrollton, TX 75006|Ph: +1 972 323 2200
www.optekinc.com | www.ttelectronics.com

© TT electronics plc

Absolute Maximum Ratings (T_A=25°C unless otherwise noted)	
Storage Temperature Range	-40°C to +80° C
Lead Soldering Temperature [1/16 inch (1.6 mm) from the case for 5 sec. with soldering iron]	240° C(1)
Input Diode	
Forward DC Current	40 mA
Reverse DC Voltage	2 V
Power Dissipation	100 mW(2)
Output Photodetector	
Collector-Emitter Voltage Phototransistor Photodarlington	 30 V 15 V
Emitter-Collector Voltage	5 V
Collector DC Current	25 mA
Power Dissipation	100 mW(2)

Notes:
(1) RMA flux is recommended. Duration can be extended to 10 seconds maximum when flow soldering.
(2) For OPB703WZ, OPB704WZ, OPB705WZ, OPB70BWZ, OPB704G, OPB704GWZ and OPB70HWZ derate linearly 1.82 mW/° C above 25° C.

General Note
TT Electronics reserves the right to make changes in product specification without notice or liability. All information is subject to TT Electronics' own data and is considered accurate at time of going to print.

OPTEK Technology, Inc.
1645 Wallace Drive, Carrollton, TX 75006|Ph: +1 972 323 2200
www.optekinc.com | www.ttelectronics.com

© TT electronics plc

Electrical Characteristics (T_A = 25° C unless otherwise noted)
(OPB703, OPB703WZ, OPB704, OPB704WZ, OPB705, OPB705WZ, OPB704G, OPB704GWZ, OPB70HWZ)

SYMBOL	PARAMETER	MIN	TYP	MAX	UNITS	TEST CONDITIONS
Input Diode (See OP265 for additional information — for reference only)						
V_F	Forward Voltage	-	-	1.7	V	I_F = 40mA
I_R	Reverse Current	-	-	100	µA	V_R = 2 V
Output Phototransistor (See OP505 for additional information — for reference only)						
$V_{(BR)CEO}$	Collector-Emitter Breakdown Voltage	30	-	-	V	I_{CE} = 100 µA
$V_{(BR)ECO}$	Emitter-Collector Breakdown Voltage	5	-	-	V	I_{EC} = 100µA
I_{CEO}	Collector Dark Current	-	-	250	nA	V_{CE} = 10 V, I_F = 0, E_E =0
Coupled						
$I_{C(ON)}$	On-State Collector Current OPB70HWZ OPB703, OPB703WZ OPB704, OPB704WZ	 0.60 0.30 0.20	 - - -	 3.5 2.5 2.5	mA	V_{CE} = 5 V, I_F = 40mA , d = 0.15" (4)(6)
	OPB704G, OPB704GWZ	0.50	-	6.0		V_{CE} = 5 V, I_F = 40mA , d = 0.20" (4)(6)
I_{CX}	Crosstalk OPB703, OPB703WZ OPB704, OPB704WZ, OPB70HWZ	 - -	 - -	 20 20	µA	V_{CE} = 5 V, I_F = 40mA(5)

Notes:
(1) RMA flux is recommended. Duration can be extended to 10 seconds maximum when flow soldering.
(2) For OPB703, OPB704 and OPB705, derate linearly 1.67 mW/° C above 25° C.
(3) For OPB703WZ, OPB704WZ, OPB705WZ, OPB70BWZ, OPB704G, OPB704GWZ, OPB70HWZ, OPB70AWZ, OPB70CWZ, OPB70DWZ, OPB70EWZ, and OPB70FWZ derate linearly 1.82 mW/° C above 25° C.
(4) The distance from the assembly face to the reflective surface is d.
(5) Crosstalk (I_{CX}) is the collector current measured with the indicated current in the input diode and with no reflecting surface.
(6) Measured using Eastman Kodak neutral white test card with 90% diffuse reflectance as a reflecting surface. Reference: Eastman Kodak, Catalog # E 152 7795.
(7) All parameters tested using pulse techniques.

General Note
TT Electronics reserves the right to make changes in product specification without notice or liability. All information is subject to TT Electronics' own data and is considered accurate at time of going to print.

OPTEK Technology, Inc.
1645 Wallace Drive, Carrollton, TX 75006|Ph: +1 972 323 2200
www.optekinc.com | www.ttelectronics.com

© TT electronics plc

Electrical Characteristics (T_A = 25° C unless otherwise noted) **(OPB70AWZ)**						
SYMBOL	**PARAMETER**	**MIN**	**TYP**	**MAX**	**UNITS**	**TEST CONDITIONS**
Input Diode (See OP265 for additional information — for reference only)						
V_F	Forward Voltage	-	-	1.7	V	I_F = 40mA
I_R	Reverse Current	-	-	100	µA	V_R = 2 V
Output PhotoDarlington (See OP535 for additional information — for reference only)						
$V_{(BR)CEO}$	Collector-Emitter Breakdown Voltage	15	-	-	V	I_{CE} = 1.0 mA, E_E =0
$V_{(BR)ECO}$	Emitter-Collector Breakdown Voltage	5	-	-	V	I_{EC} = 100µA, E_E =0
I_{CEO}	Collector Dark Current	-	-	250	nA	V_{CE} = 10 V, I_F = 0, E_E =0
Coupled						
$I_{C(ON)}$	On-State Collector Current	5.0	-	26.0	mA	V_{CE} = 5 V, I_F = 40mA , d = 0.15" (1)(3)
$V_{(SAT)}$	Saturation Voltage	-	-	1.15	V	I_C = 400 µA, I_F = 40mA , d = 0.15" (1)(3)
I_{CX}	Crosstalk	-	-	25	µA	V_{CE} = 5 V, I_F = 40mA(2)

Notes:
(1) The distance from the assembly face to the reflective surface is d.
(2) Crosstalk (I_{CX}) is the collector current measured with the indicated current in the input diode and with no reflecting surface.
(3) Measured using Eastman Kodak neutral white test card with 90% diffuse reflectance as a reflecting surface. Reference: Eastman Kodak, Catalog # E 152 7795.

General Note
TT Electronics reserves the right to make changes in product specification without notice or liability. All information is subject to TT Electronics' own data and is considered accurate at time of going to print.

© TT electronics plc

OPTEK Technology, Inc.
1645 Wallace Drive, Carrollton, TX 75006|Ph: +1 972 323 2200
www.optekinc.com | www.ttelectronics.com

Electrical Characteristics (T_A = 25° C unless otherwise noted) **(OPB70BWZ)**						
SYMBOL	**PARAMETER**	**MIN**	**TYP**	**MAX**	**UNITS**	**TEST CONDITIONS**
Input Diode (See OP265 for additional information — for reference only)						
V_F	Forward Voltage	-	-	1.7	V	I_F = 40mA
I_R	Reverse Current	-	-	100	µA	V_R = 2 V
Output Phototransistor (See OP705 for additional information — for reference only)						
$V_{(BR)CEO}$	Collector-Emitter Breakdown Voltage	30	-	-	V	I_{CE} = 100 µA
$V_{(BR)ECO}$	Emitter-Collector Breakdown Voltage	0.4	-	-	V	I_{EC} = 100µA
I_{CEO}	Collector Dark Current	-	-	100	nA	V_{CE} = 10 V, I_F = 0, E_E =0
Coupled						
$I_{C(ON)}$	On-State Collector Current OPB70BWZ	0.50	-	3.0	mA	V_{CE} = 5 V, I_F = 40mA , d = 0.15" (1)(3)
I_{CX}	Crosstalk OPB70BWZ	-	-	5	µA	V_{CE} = 5 V, I_F = 40mA(2)

Notes:
(1) The distance from the assembly face to the reflective surface is d.
(2) Crosstalk (I_{CX}) is the collector current measured with the indicated current in the input diode and with no reflecting surface.
(3) Measured using Eastman Kodak neutral white test card with 90% diffuse reflectance as a reflecting surface. Reference: Eastman Kodak, Catalog # E 152 7795.

General Note
TT Electronics reserves the right to make changes in product specification without notice or liability. All information is subject to TT Electronics' own data and is considered accurate at time of going to print.

OPTEK Technology, Inc.
1645 Wallace Drive, Carrollton, TX 75006|Ph: +1 972 323 2200
www.optekinc.com | www.ttelectronics.com

© TT electronics plc

Electrical Characteristics (T_A = 25° C unless otherwise noted) **(OPB70CWZ and OPB70EWZ)**						
SYMBOL	**PARAMETER**	**MIN**	**TYP**	**MAX**	**UNITS**	**TEST CONDITIONS**
Input Diode (See OVLAS6CB8 for additional information — for reference only)						
V_F	Forward Voltage	-	-	2.6	V	I_F = 40mA
I_R	Reverse Current	-	-	100	µA	V_R = 2 V
Output Phototransistor (See OP505 for additional information — for reference only)						
$V_{(BR)CEO}$	Collector-Emitter Breakdown Voltage	30	-	-	V	I_{CE} = 100µA, I_F = 0, E_E =0
$V_{(BR)ECO}$	Emitter-Collector Breakdown Voltage	0.4	-	-	V	I_{EC} = 100µA, I_F = 0, E_E =0
I_{CEO}	Collector Dark Current	-	-	100	nA	V_{CE} = 10 V, I_F = 0, E_E =0

Coupled

$I_{C(ON)}$	On-State Collector Current	OPB70CWZ	.10	-	1.0	mA	V_{CE} = 5 V, I_F = 40mA , d = 0.15" (21(3)
		OPB70EWZ	.25	-	2.5		
$V_{(SAT)}$	Saturation Voltage		-	-	0.4	V	I_C = 100 µA, I_F = 40mA , d = 0.15" (1)(3)
I_{CX}	Crosstalk		-	-	2	µA	V_{CE} = 5 V, I_F = 40mA(2)

Notes:
(1) The distance from the assembly face to the reflective surface is d.
(2) Crosstalk (I_{CX}) is the collector current measured with the indicated current in the input diode and with no reflecting surface.
(3) Measured using Eastman Kodak neutral white test card with 90% diffuse reflectance as a reflecting surface. Reference: Eastman Kodak, Catalog # E 152 7795.

General Note
TT Electronics reserves the right to make changes in product specification without notice or liability. All information is subject to TT Electronics' own data and is considered accurate at time of going to print.

© TT electronics plc

OPTEK Technology, Inc.
1645 Wallace Drive, Carrollton, TX 75006|Ph: +1 972 323 2200
www.optekinc.com | www.ttelectronics.com

Electrical Characteristics (T_A = 25° C unless otherwise noted) **(OPB70DWZ and OPB70FWZ)**						
SYMBOL	**PARAMETER**	**MIN**	**TYP**	**MAX**	**UNITS**	**TEST CONDITIONS**
Input Diode (See OVLAS6CB8 for additional information — for reference only)						
V_F	Forward Voltage	-	-	2.6	V	I_F = 40mA
I_R	Reverse Current	-	-	100	µA	V_R = 2 V
Output Phototransistor (See OP505 for additional information — for reference only)						
$V_{(BR)CEO}$	Collector-Emitter Breakdown Voltage	30	-	-	V	I_{CE} = 100µA, I_F = 0, E_E =0
$V_{(BR)ECO}$	Emitter-Collector Breakdown Voltage	5.0	-	-	V	I_{EC} = 100µA, I_F = 0, E_E =0
I_{CEO}	Collector Dark Current	-	-	250	nA	V_{CE} = 10 V, I_F = 0, E_E =0

Coupled							
$I_{C(ON)}$	On-State Collector Current	OPB70DWZ	.10	-	1.5	mA	V_{CE} = 5 V, I_F = 40mA , d = 0.15" (1)(3)
		OPB70FWZ	.25	-	3.5		
$V_{(SAT)}$	Saturation Voltage		-	-	0.4	V	$I_{C(ON)}$ = 100 µA, I_F = 40mA , d = 0.15" (1)(3)
I_{CX}	Crosstalk		-	-	5.0	µA	V_{CE} = 5 V, I_F = 40mA(2)

Notes:
(1) The distance from the assembly face to the reflective surface is d.
(2) Crosstalk (I_{CX}) is the collector current measured with the indicated current in the input diode and with no reflecting surface.
(3) Measured using Eastman Kodak neutral white test card with 90% diffuse reflectance as a reflecting surface. Reference: Eastman Kodak, Catalog # E 152 7795.

General Note
TT Electronics reserves the right to make changes in product specification without notice or liability. All information is subject to TT Electronics' own data and is considered accurate at time of going to print.

OPTEK Technology, Inc.
1645 Wallace Drive, Carrollton, TX 75006|Ph: +1 972 323 2200
www.optekinc.com | www.ttelectronics.com

© TT electronics plc

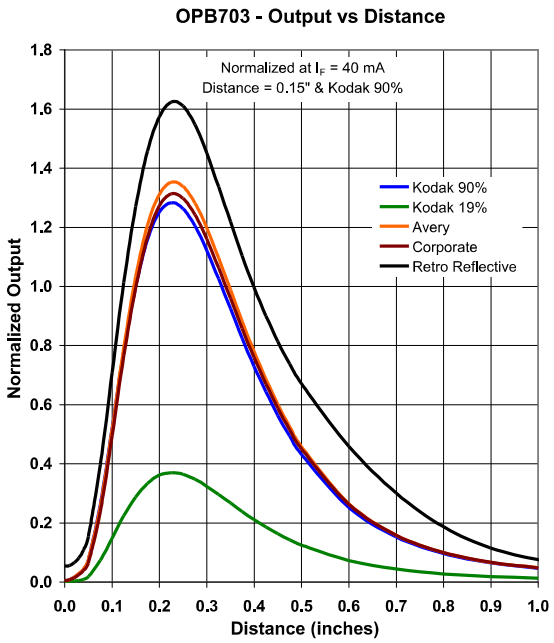

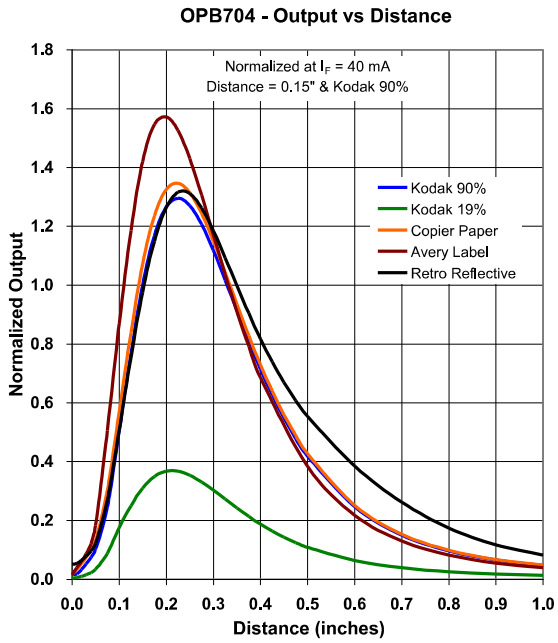

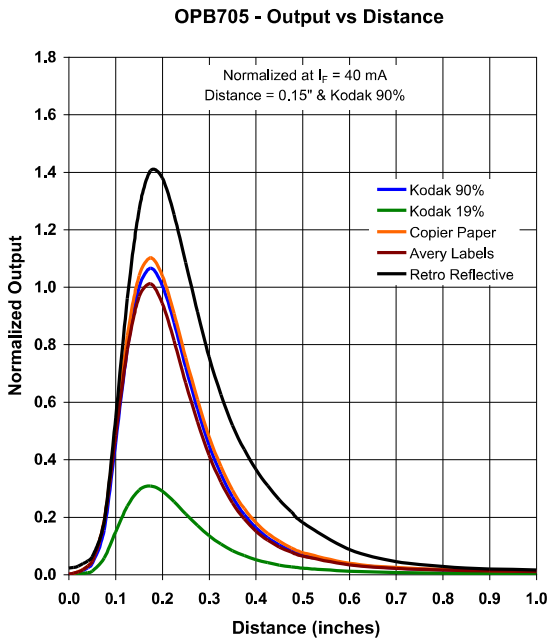

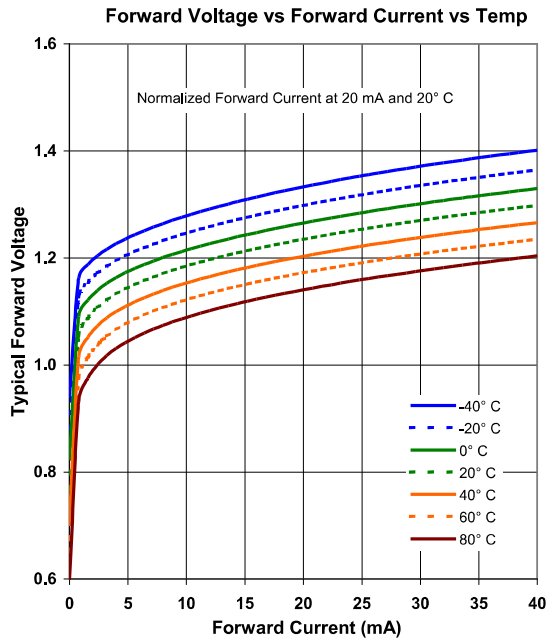

General Note
TT Electronics reserves the right to make changes in product specification without notice or liability. All information is subject to TT Electronics' own data and is considered accurate at time of going to print.

© TT electronics plc

OPTEK Technology, Inc.
1645 Wallace Drive, Carrollton, TX 75006|Ph: +1 972 323 2200
www.optekinc.com | www.ttelectronics.com

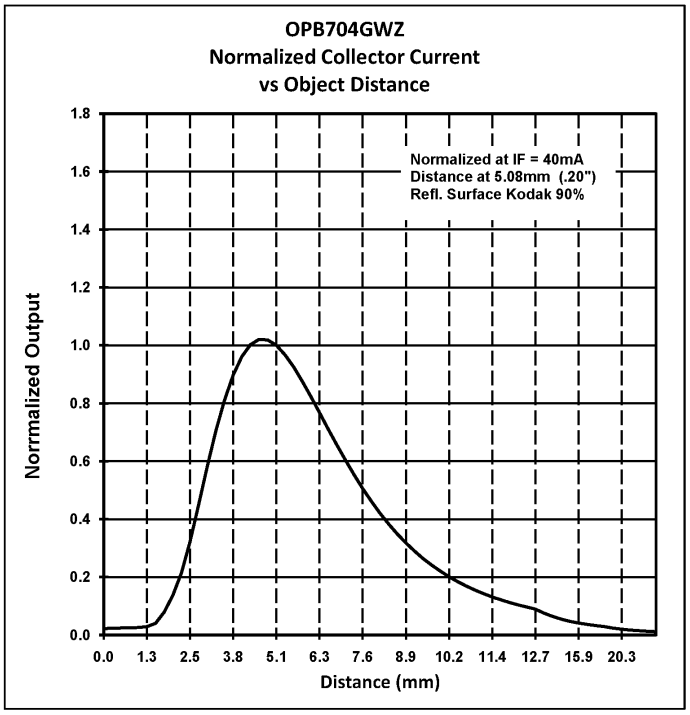

General Note
TT Electronics reserves the right to make changes in product specification without notice or liability. All information is subject to TT Electronics' own data and is considered accurate at time of going to print.

© TT electronics plc

OPTEK Technology, Inc.
1645 Wallace Drive, Carrollton, TX 75006|Ph: +1 972 323 2200
www.optekinc.com | www.ttelectronics.com